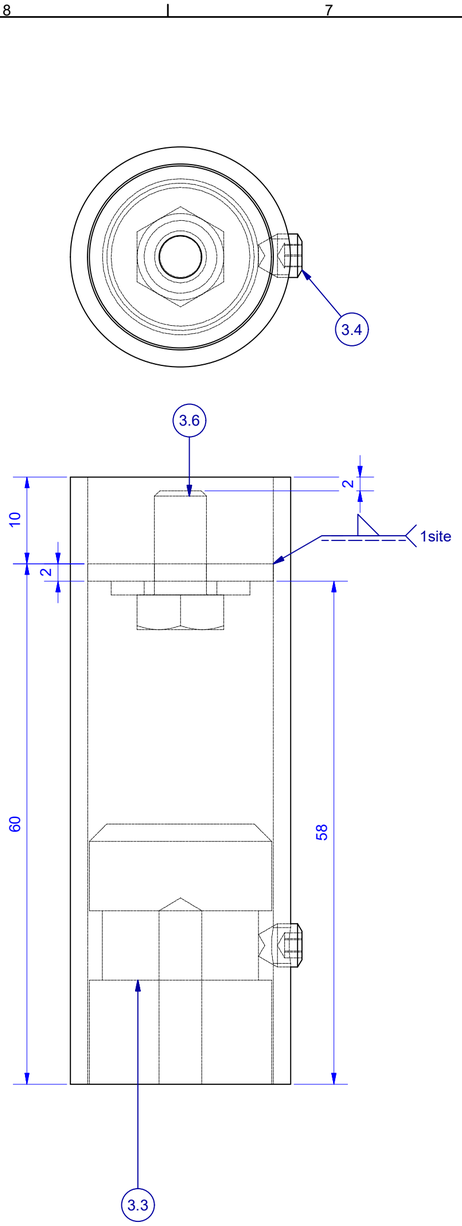

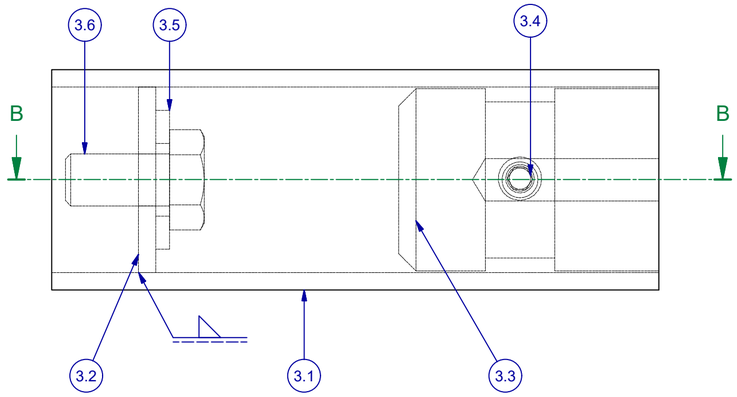

B-B (2 : 1)

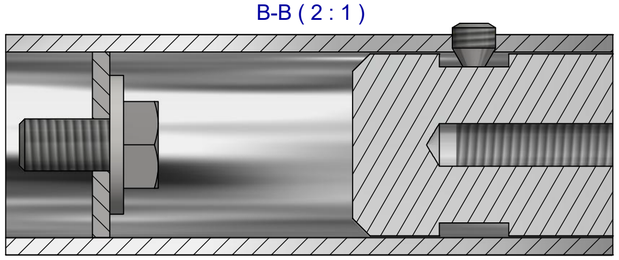

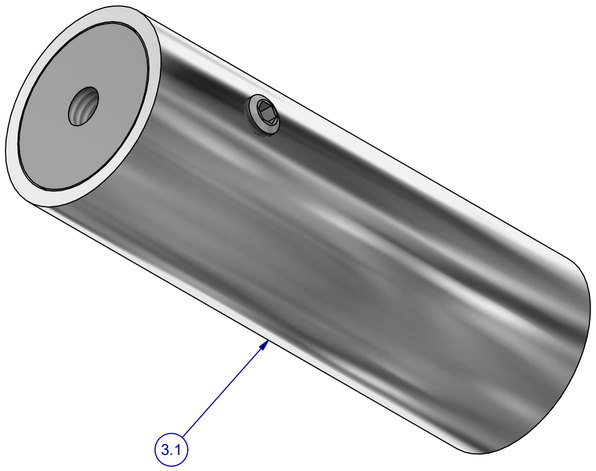

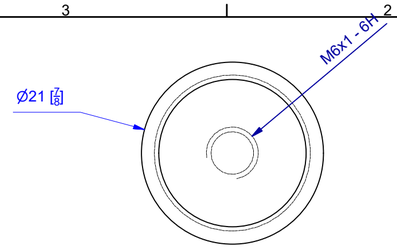

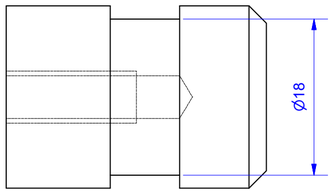

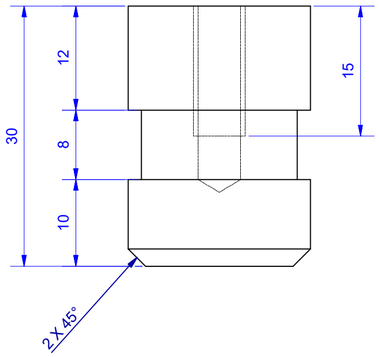

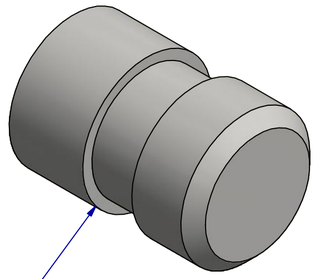

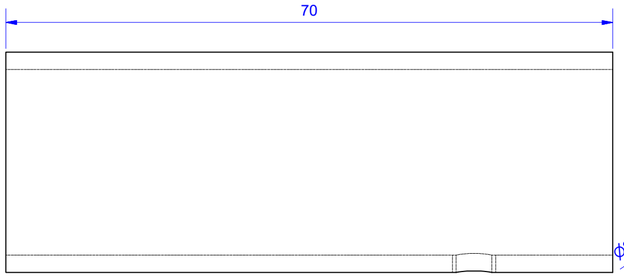

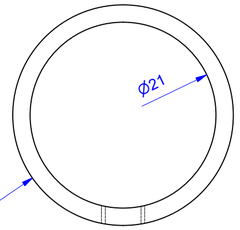

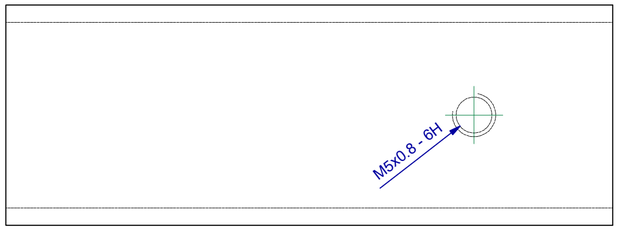

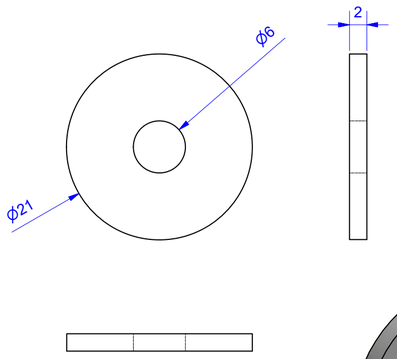

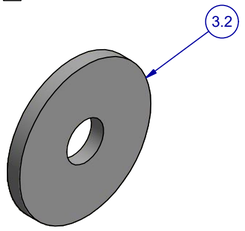

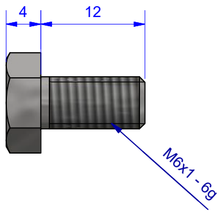

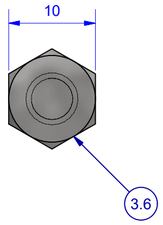

PARTS LIST

ITEM	QTY	PART NUMBER	DESCRIPTION	MATERIAL	MASS
1	4	INS230X0.5IN20		Stainless Steel	0,033 kg
2	4	RB17X15X6		Stainless Steel	0,025 kg
3	4	WB17X70X6			0,121 kg
3.1	1	RT198100		Stainless Steel	0,083 kg
3.2	1	RB17X3X6		Stainless Steel	0,005 kg
3.3	1	WB17X30X6		Aluminum 6061	0,025 kg
3.4	1	DIN 916 - M5 x 5	Hexagon Socket Set Screw	Stainless Steel	0,001 kg
3.5	1	DIN 125-2 - B 8.4	Washer	Stainless Stee	0,002 kg
3.6	1	ISO 4018 - M6 x 12	Hex-Head Bolt	Stainless Steel	0,005 kg
4	24	RT139450		Stainless Steel	0,245 kg
5	2	ST2301067X22		Stainless Steel	0,935 kg

	Date	Name
Drawn	17/07/2010	Frank Bauwens
Checked		
Standard		

aReBa creations

RFUR161042600

2

A2

State | Changes | Date | Name

© All drawings are the property of **Frank Bauwens** and protected by "intellectual copyright"