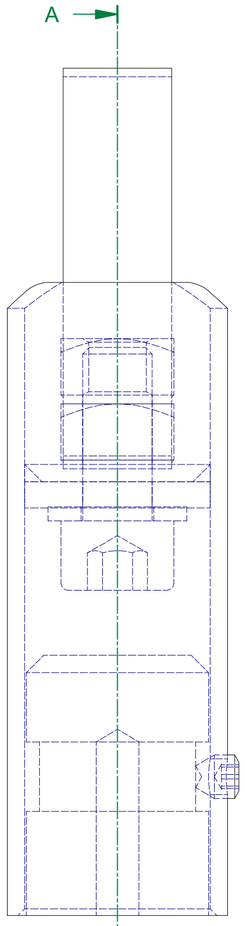

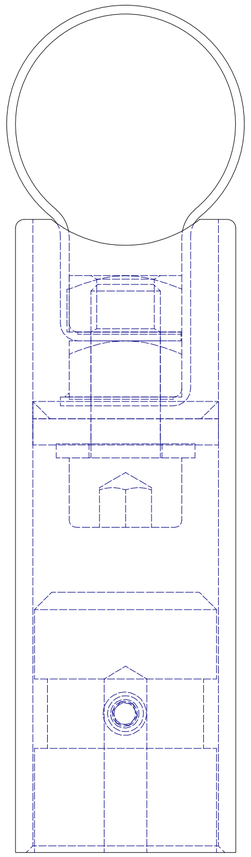

A-A (2 : 1)

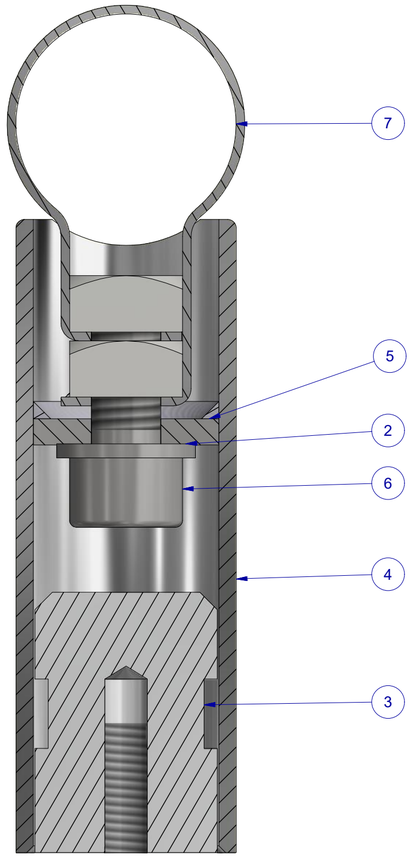

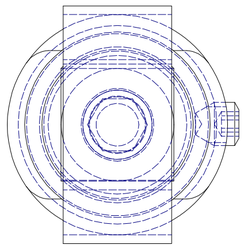

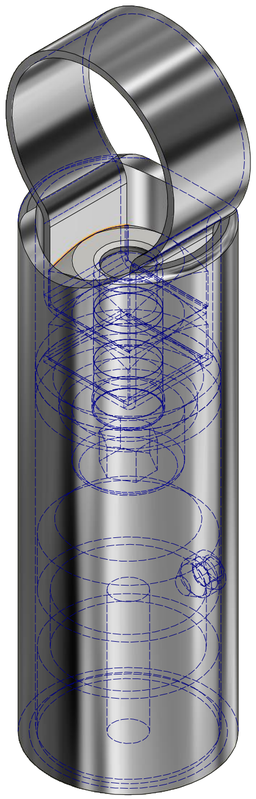

PARTS LIST

ITEM	QTY	PART NUMBER	DESCRIPTION	MATERIAL	MASS
1	1	DIN 916 - M5 x 5	Hexagon Socket Set Screw	Stainless Steel	0,001 kg
2	1	DIN 125-2 - B 8.4	Washer	Stainless Steel	0,002 kg
3	1	WB17X30X6		Aluminum 6061	0,025 kg
4	1	RT198070		Stainless Steel	0,085 kg
5	1	RB17X3X6		Stainless Steel	0,007 kg
6	1	CNS 3932 - M 8 x 20	Hexagon Socket Head Cap Screw	Stainless Steel	0,015 kg
7	1	LINT 25X1X14			0,025 kg

	Date	Name
Drawn	16/07/2020	Frank
Checked		
Standard		

aReBa creations

DECOFIX_SST25X70

1

A2

Changes	Date	Name

State

© All drawings are the property of Frank Bauwens and protected by "intellectual copyright"